# ROTARY CODED SWITCHES S-1000A/2000A

RoHS compliant

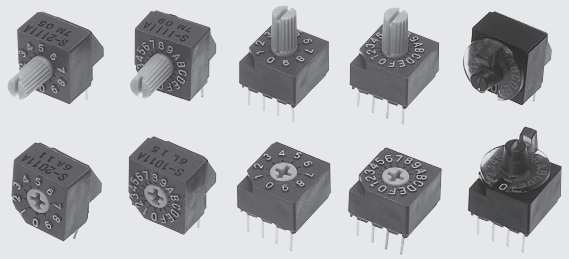

## FEATURES

- RoHS compliant
- Protection against dust and whole cleaning after soldering is possible
- Pin compatible with conventional DIP switches
- Translucent knob with flange type (S-1200A/2200A series)
  - Distinguished visibility with translucent flange
  - Settable with fingers or screwdriver
- Resin materials are UL Recognized 94V-2 or 94HB

**INTERNAL STRUCTURE**
**S-1000A / 2000A series**

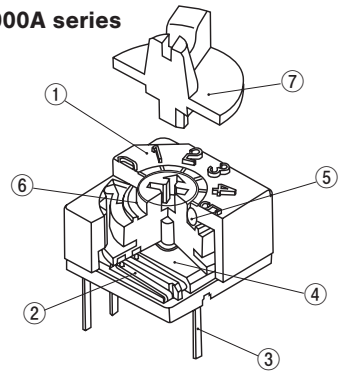


| Part name | | Material |
|---|---|---|
| ① | Housing | Polybutyleneterephthalate |
| ② | Contact | Copper alloy, Gold-plated |
| ③ | Terminal pin | |
| ④ | Base | Polybutyleneterephthalate |
| ⑤ | "O" ring | Silicone rubber |
| ⑥ | Insert rotor | Rotor : Polyoxymethylene<br>Pattern : Copper alloy, Gold-plated |
| ⑦ | Translucent knob with | PAR(Polyarylate)<br>※ S-12□ □A/22□ □A only |

## PART NUMBER DESIGNATION

S - 1 0 1 0 A W

Series name

No. of positions
1 : 16 positions
2 : 10 positions

Shape of rotor
0 : Without knob
1 : With knob (with extended shaft)
2 : Translucent knob with flange (Black housing)

Code format
1 : Real code
3 : Complementary code

Setting position
0 : Top setting
1 : Side setting

Form of packaging
W : Tray packaging
Blank : Bulk in plastic bag

**※ Please refer to the LIST OF PART NUMBERS when placing orders.**

# S-1000A/2000A
## ROTARY CODED SWITCHES

## ■ LIST OF PART NUMBERS

| Shape | | Form of packging | Binary coded decimal | | Binary coded hexadecimal | | Packaging quantity |
|---|---|---|---|---|---|---|---|
| | | | Real code | Complementary code | Real code | Complementary code | |
| Top setting | Without knob | Tray packaging | S-2010AW | S-2030AW | S-1010AW | S-1030AW | 50 pcs./tray |
| | | Plastic bag | S-2010A | S-2030A | S-1010A | S-1030A | 25 pcs./pack |
| | With knob | Tray packaging | S-2110AW | S-2130AW | S-1110AW | S-1130AW | 50 pcs./tray |
| | | Plastic bag | S-2110A | S-2130A | S-1110A | S-1130A | 25 pcs./pack |
| | Translucent knob with flange | Tray packaging | S-2210AW | S-2230AW | S-1210AW | S-1230AW | 50 pcs./tray |
| | | Plastic bag | S-2210A | S-2230A | S-1210A | S-1230A | 25 pcs./pack |
| Side setting | Without knob | Tray packaging | S-2011AW | S-2031AW | S-1011AW | S-1031AW | 50 pcs./tray |
| | | Plastic bag | S-2011A | S-2031A | S-1011A | S-1031A | 25 pcs./pack |
| | With knob | Tray packaging | S-2111AW | S-2131AW | S-1111AW | S-1131AW | 50 pcs./tray |
| | | Plastic bag | S-2111A | S-2131A | S-1111A | S-1131A | 25 pcs./pack |
| | Translucent knob with flange | Tray packaging | S-2211AW | S-2231AW | S-1211AW | S-1231AW | 50 pcs./tray |
| | | Plastic bag | S-2211A | S-2231A | S-1211A | S-1231A | 25 pcs./pack |

※ Verify the above part numbers when placing orders.
Tray version can be supplied only in tray units.

## ■ TERMINAL CONNECTION / P.C.B. THROUGH HOLE DIMENSIONS

(Unit: mm)

| | Top setting | Side setting |
|---|---|---|
| Terminal pin layout (Bottom view) | Real code / Complementary code | Operating face of real code / Operating face of complementary code |
| P.C.B. dimensions (Bottom view) | 2.54±0.1, 2.54±0.1, 5−φ0.8 hole, 7.62±0.1, S − 1000A/2000A case | Operating face, 2.54±0.1, 2.54±0.1, 5−φ0.8 hole, 5.08±0.1, S − 1000A/2000A case |

## ■ CODE FORMAT

| No. of positions | | | S-1000A series (16 positions) | | | | | | | | | | | | | | | |
|---|---|---|---|---|---|---|---|---|---|---|---|---|---|---|---|---|---|---|
| | | | S-2000A series (10 positions) | | | | | | | | | | | | | | | |
| Position | | | 0 | 1 | 2 | 3 | 4 | 5 | 6 | 7 | 8 | 9 | A | B | C | D | E | F |
| Code | Real code | 8 | | | | | | | | | ● | ● | ● | ● | ● | ● | ● | ● |
| | | 4 | | | | | ● | ● | ● | ● | | | | | ● | ● | ● | ● |
| | | 2 | | | ● | ● | | | ● | ● | | | ● | ● | | | ● | ● |
| | | 1 | | ● | | ● | | ● | | ● | | ● | | ● | | ● | | ● |
| | Complementary code | $\overline{8}$ | ● | ● | ● | ● | ● | ● | ● | ● | | | | | | | | |
| | | $\overline{4}$ | ● | ● | ● | ● | | | | | ● | ● | ● | ● | | | | |
| | | $\overline{2}$ | ● | ● | | | ● | ● | | | ● | ● | | | ● | ● | | |
| | | $\overline{1}$ | ● | | ● | | ● | | ● | | ● | | ● | | ● | | ● | |

● ...Contact closed

# S-1000A/2000A
## ROTARY CODED SWITCHES

## STANDARD SPECIFICATIONS

| | |
|---|---|
| Circuit type | BCD (Real code, complementary code)<br>BCH (Real code, complementary code) |
| Operating temp. range | −40 ～ 85 °C |
| Storage temp. range | |
| Sealing | Washable by “O” ring<br>※ Please refer to page 149,150 |
| Net weight | Approx. 0.87 g<br>(S-1010A, S-1030A, S-2010A, S-2030A)<br>Approx. 1.13 g<br>(S-1011A, S-1031A, S-2011A, S-2031A)<br>Approx. 0.97 g<br>(S-1110A, S-1130A, S-2110A, S-2130A)<br>Approx. 1.23 g<br>(S-1111A, S-1131A, S-2111A, S-2131A)<br>Approx. 1.02 g<br>(S-1210A, S-1230A, S-2210A, S-2230A)<br>Approx. 1.28 g<br>(S-1211A, S-1231A, S-2211A, S-2231A) |

## MECHANICAL CHARACTERISTICS

| | |
|---|---|
| No. of positions | 16 (S-1000A), 10 (S-2000A) |
| Adjustment torque | 13 mN·m {133 gf·cm} minimum |
| Stepping angle | 22.5° (S-1000A), 36° (S-2000A) |
| Terminal strength | 15 N {1.53 kgf} minimum |
| Solderability | 245 ± 3 °C, 2 ~ 3 s |
| Soldering heat | Flow : 260 ± 3 °C as the temperature in a pot of molten solder, immersion from head of terminal to backside of board, 5 ~ 6 s, two times maximum |
| | Manual soldering : 380 ± 10 °C, 3 ~ 4 s |

{ } : Reference only

## ELECTRICAL CHARACTERISTICS

| | |
|---|---|
| Contact rating<br>Non-switching<br>Switching<br>Minimum | <br>DC50 V 100 mA<br>DC5 V 100 mA<br>DC20 mV 1 μA |
| Contact resistance | 100 mΩ maximum |
| Insulation resistance | 1000 MΩ (DC100 V) minimum |
| Dielectric strength | AC300 V, 60 s |

## ENVIRONMENTAL CHARACTERISTICS

| | |
|---|---|
| Vibration | Amplitude 1.5 mm or<br>Acceleration 98 m/s$^2$,<br>10-500-10 Hz, 3 directions for 2 h each |
| Shock | 490 m/s$^2$, 11 ms<br>6 directions for 3 times each |
| Load life | 10000 steps<br>DC5 V, 100 mA |
| Humidity (Steady state) | Resistance load DC50V 100mA<br>60 °C, Relative humidity 90 ~ 95 %, 1000 h |
| High temp. exposure | 85 °C, 1000 h |
| Low temp. exposure | −40 °C, 96 h |
| Thermal shock | −40 (0.5 h) ~ 85 °C (0.5 h), 5 cycles |

## ■ OUTLINE DIMENSIONS

Unless otherwise specified, tolerance: ± 0.3 (Unit: mm)

### (S-1000A series)

● **S-1010A**
● **S-1030A**
**Top setting**

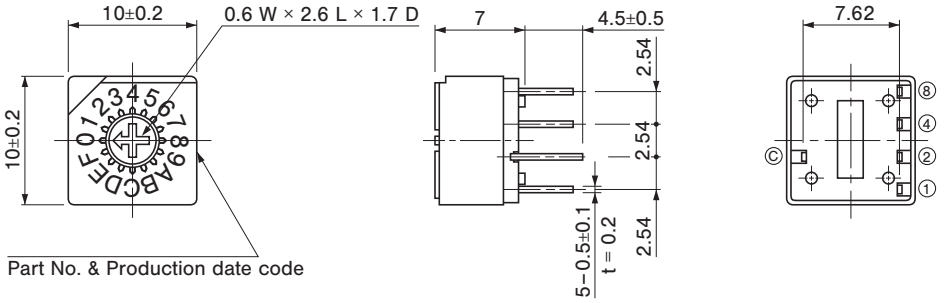


● **S-1011A**
● **S-1031A**
**Side setting**

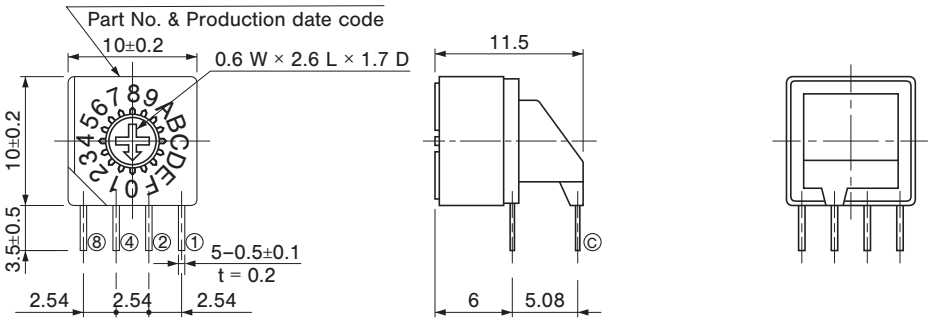


● **S-1110A**
● **S-1130A**
**Top setting**

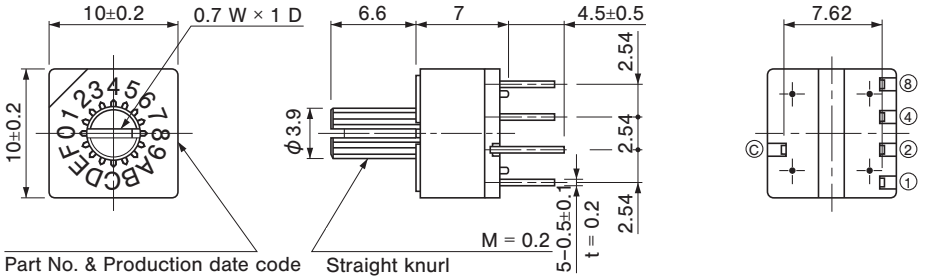


● **S-1111A**
● **S-1131A**
**Side setting**

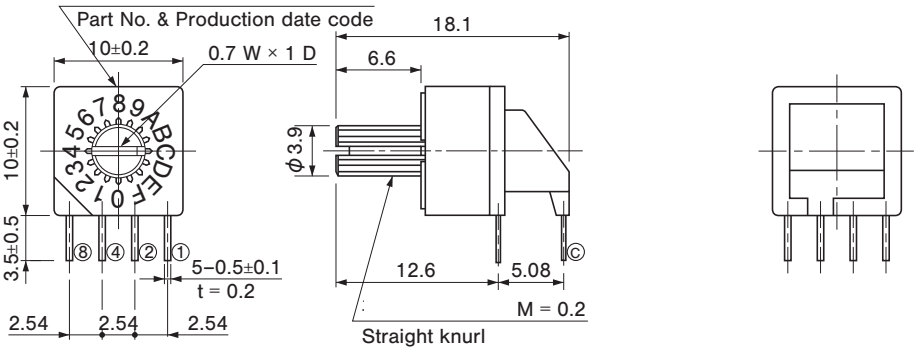

# S-1000A/2000A
## ROTARY CODED SWITCHES

## ■ OUTLINE DIMENSIONS

Unless otherwise specified, tolerance: ± 0.3 (Unit: mm)

### (S-2000A series)

● **S-2010A**
● **S-2030A**
**Top setting**

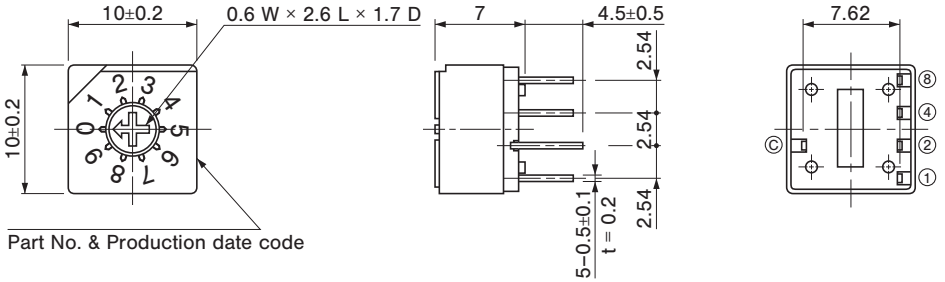


● **S-2011A**
● **S-2031A**
**Side setting**

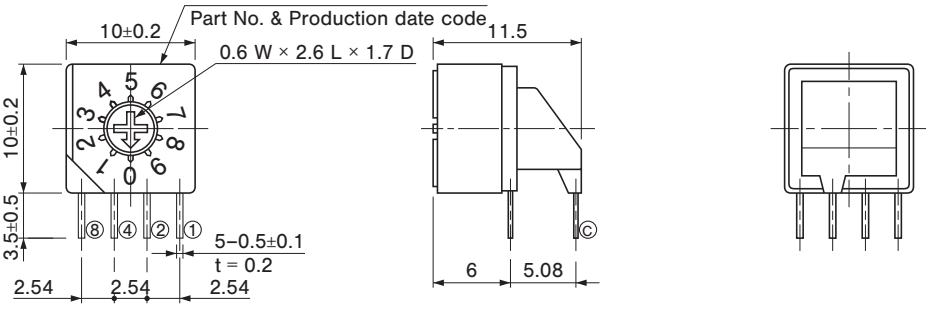


● **S-2110A**
● **S-2130A**
**Top setting**

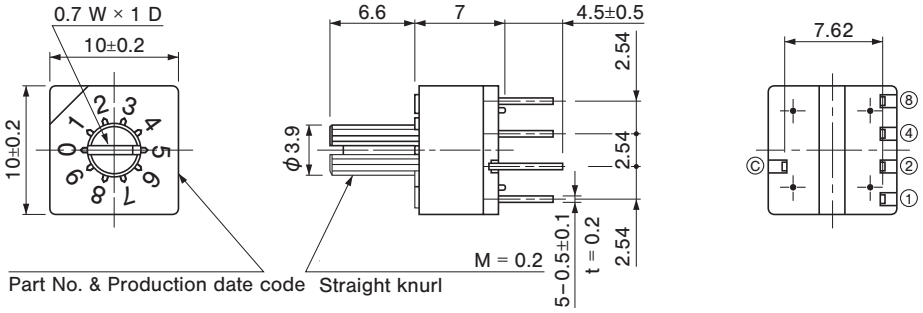


● **S-2111A**
● **S-2131A**
**Side setting**

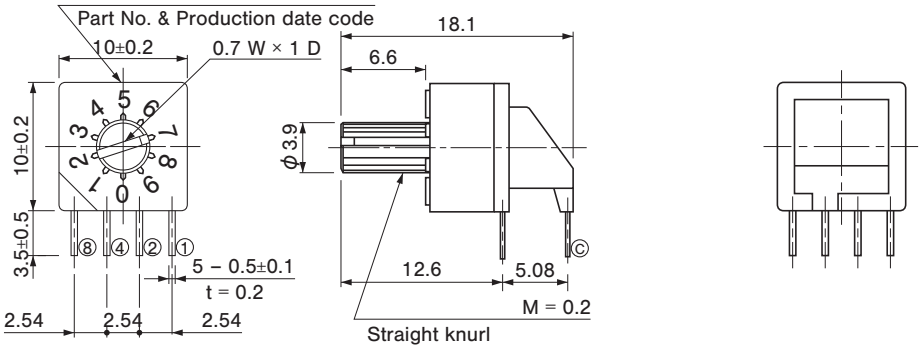

## ■ OUTLINE DIMENSIONS

Unless otherwise specified, tolerance: ± 0.3 (Unit: mm)

### (S-1200A/2200A series)

● **S-1210A**
● **S-1230A**
**Top setting**

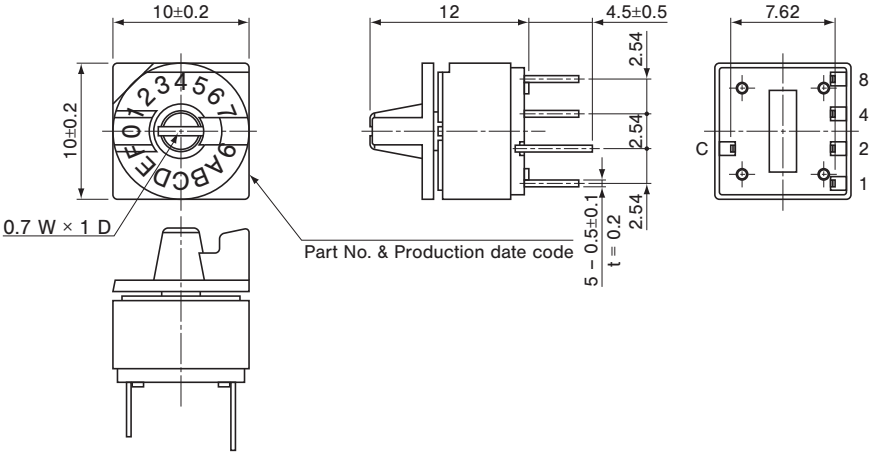


● **S-1211A**
● **S-1231A**
**Side setting**

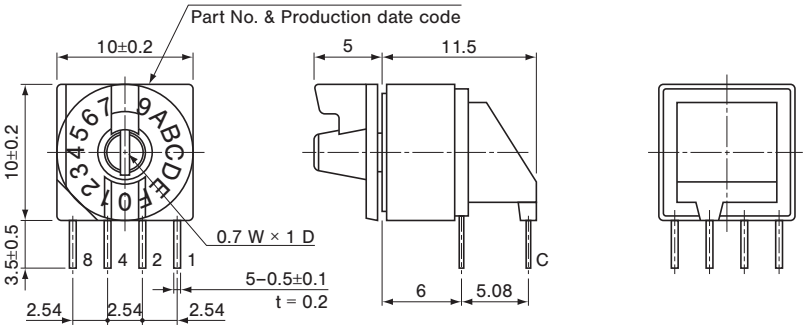


● **S-2210A**
● **S-2230A**
**Top setting**

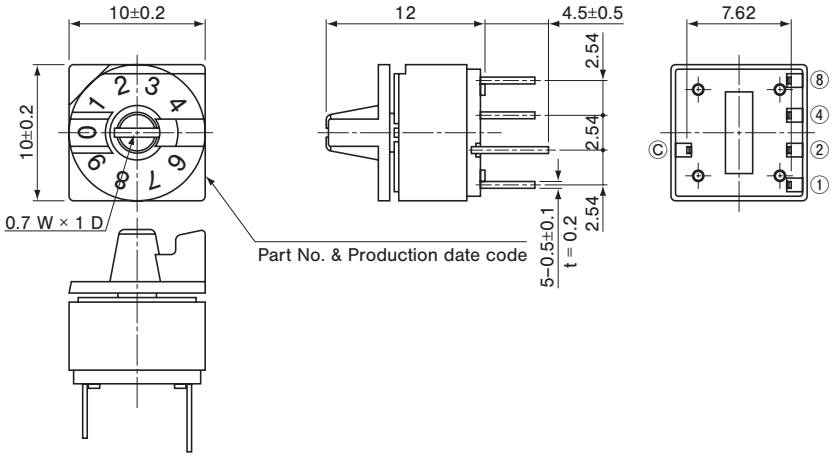


● **S-2211A**
● **S-2231A**
**Side setting**

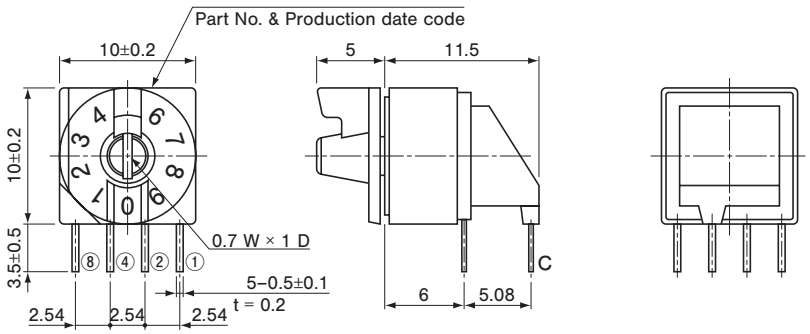

# S-1000A/2000A
## ROTARY CODED SWITCHES

## ■ Snap-in terminal pin with translucent knob with flange (Made to order basis)

● **S-1200AK and S-2200AK**

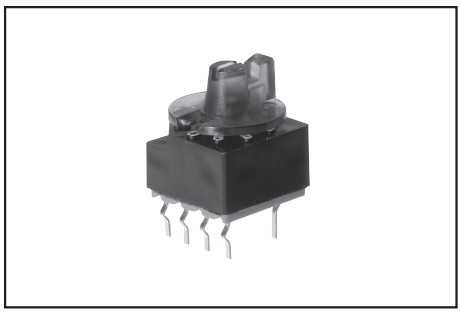

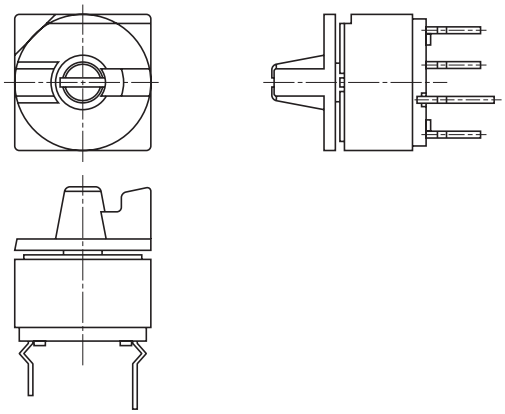

## ■ PACKAGING SPECIFICATIONS

**<Tray packaging specifications>**

- Tray version is packaged in 50 pcs. per tray. Orders will be accepted for units of 50 pcs., i. e., 50, 100, 150 pcs. etc.
- Tray version is boxed with 10 trays.

**<Bulk pack specifications>**

- The smallest unit of bulk pack in a plastic bag is 10 pcs. per pack.
  Orders will be accepted for unit of minimum 10 pcs., i.e., 10, 20, 30 pcs. , etc.
- Boxing of bulk in a plastic bag is performed with 25 pcs. (standard 50 pcs.) per box.

## ■ SWITCHES WITH KNOB AS EXTENDED SHAFT

(Unit: mm)

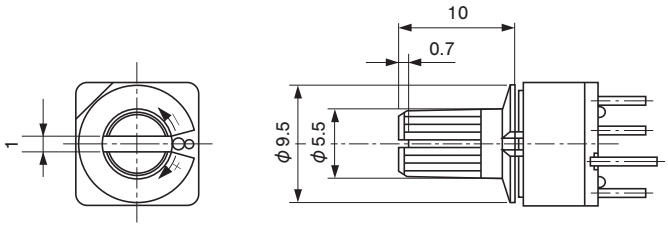


The large knob is common to S-1000A, S-2000A, SA-5000 series.

※ Knob can't be dettached due to being fixed. Simple knob can't be sold.