2227642-1 ✔ ACTIVE

Mini-SAS HD

TE Internal #: 2227642-1

Internal Mini-SAS HD, Receptacle, Cable-to-Board, 144 Position, 4 Row, 4 Port, Vertical, Through Hole - Press-Fit, Mini-SAS HD

View on TE.com >

Connectors > PCB Connectors > SAS & MiniSAS > Internal Mini-SAS HD Receptacles

SAS Connector Type: **Internal Mini-SAS HD**

Connector & Housing Type: **Receptacle**

Connector System: **Cable-to-Board**

Number of Positions: **144**

Number of Rows: **4**

All Internal Mini-SAS HD Receptacles (6)

Features

Product Type Features

Connector & Contact Terminates To	Printed Circuit Board
Shell	Without
SAS Connector Type	Internal Mini-SAS HD
Connector & Housing Type	Receptacle
Connector System	Cable-to-Board

Configuration Features

Number of Positions	144
Number of Rows	4
Number of Ports	4
PCB Mount Orientation	Vertical

Contact Features

Contact Base Material	Copper Alloy

Termination Features

Termination Method to PCB	Through Hole - Press-Fit

Housing Features

Centerline (Pitch)	.75 mm[.029 in]

Usage Conditions

Operating Temperature Range	-55 – 85 °C[-67 – 185 °F]

Operation/Application

Circuit Application	Signal

Product Compliance

For compliance documentation, visit the product page on TE.com>

EU RoHS Directive 2011/65/EU	Compliant
EU ELV Directive 2000/53/EC	Compliant
China RoHS 2 Directive MIIT Order No 32, 2016	No Restricted Materials Above Threshold
EU REACH Regulation (EC) No. 1907/2006	Current ECHA Candidate List: JAN 2025 (247) Candidate List Declared Against: JAN 2025 (247) Does not contain REACH SVHC
Halogen Content	Low Halogen - Br, Cl, F, I < 900 ppm per homogenous material. Also BFR/CFR/PVC Free
Solder Process Capability	Not applicable for solder process capability

Product Compliance Disclaimer

This information is provided based on reasonable inquiry of our suppliers and represents our current actual knowledge based on the information they provided. This information is subject to change. The part numbers that TE has identified as EU RoHS compliant have a maximum concentration of 0.1% by weight in homogenous materials for lead, hexavalent chromium, mercury, PBB, PBDE, DBP, BBP, DEHP, DIBP, and 0.01% for cadmium, or qualify for an exemption to these limits as defined in the Annexes of Directive 2011/65/EU (RoHS2). Finished electrical and electronic equipment products will be CE marked as required by Directive 2011/65/EU. Components may not be CE marked. Additionally, the part numbers that TE has identified as EU ELV compliant have a maximum concentration of 0.1% by weight in homogenous materials for lead, hexavalent chromium, and mercury, and 0.01% for cadmium, or qualify for an exemption to these limits as defined in the Annexes of Directive 2000/53/EC (ELV). Regarding the REACH Regulation, the information TE provides on SVHC in articles for this part number is based on the latest European Chemicals Agency (ECHA) 'Guidance on requirements for substances in articles' posted at this URL: https://echa.europa.eu/guidance-documents/guidance-on-reach

Compatible Parts

TE Part # 2227640-1
1X2 VERT ASSY, MINI SAS HD INTERNAL

TE Part # 2215044-2
ASSY, REMOVAL TOOL

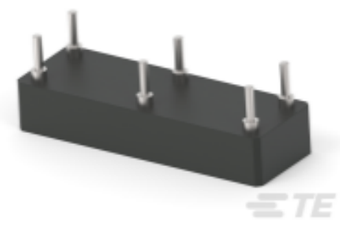

TE Part # 2185275-3
ASY, RMVL TL, SHROUD, MINI-SAS

TE Part # 2149027-1
MiniSAS HD 1x1 Rec Assy

Also in the Series | Mini-SAS HD

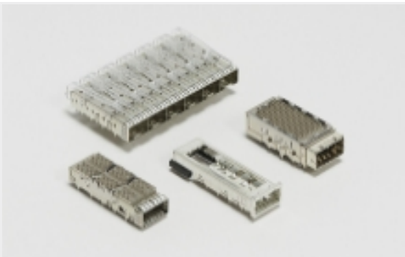

Pluggable IO Connectors & Cages(10)

SAS & MiniSAS(10)

SATA & Micro SATA(1)

Customers Also Bought

TE Part #225675-E
POWELM STIFT VOLLM M3 5 2,54 * EP 3,0 *

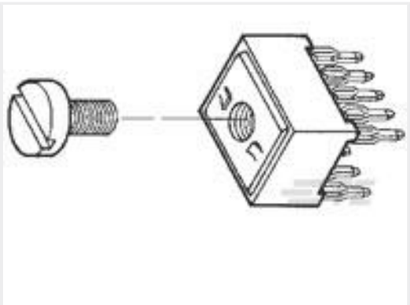

TE Part #9-55556-0
10 POWER TAP ASSY WITH SCREW #6-32

TE Part #170205-1
E.I. SERIES CONTACT LP

TE Part #1-175102-1
AMP CT CRIMP REC CONTACT

TE Part #175778-3
CT.CRIMP REC HSG 3P

TE Part #352068-1
Z-PACK/A F-HDR 110P

TE Part #3-2176339-9
CRGCQ 0603 15K 1%

TE Part #2227595-1
1X1 VERT ASSY, MINI SAS HD INTERNAL

TE Part #1-2359992-1
Low Profile SlimSAS x8 V/T Rec

TE Part #5747193-2
50 RCPT RA/MS STD (SL)

Documents

Product Drawings

1X4 VERT ASSY, MINI SAS HD INTERNAL

English

CAD Files

3D PDF

3D

Customer View Model

ENG_CVM_CVM_2227642-1_A.2d_dxf.zip

English

Customer View Model

ENG_CVM_CVM_2227642-1_A.3d_igs.zip

English

Customer View Model

ENG_CVM_CVM_2227642-1_A.3d_stp.zip

English

By downloading the CAD file I accept and agree to the Terms and Conditions of use.

Product Specifications

Application Specification

English

Agency Approvals

UL Report

English